REV.	ECN NO.	DATE	SIGN	DESCRIPTION
B	C201809	2020/11/20	Vicky	B X3
C	C210025	2021/01/19	Vicky	C X1
D	C210497	2021/03/30	Ruru	D X2

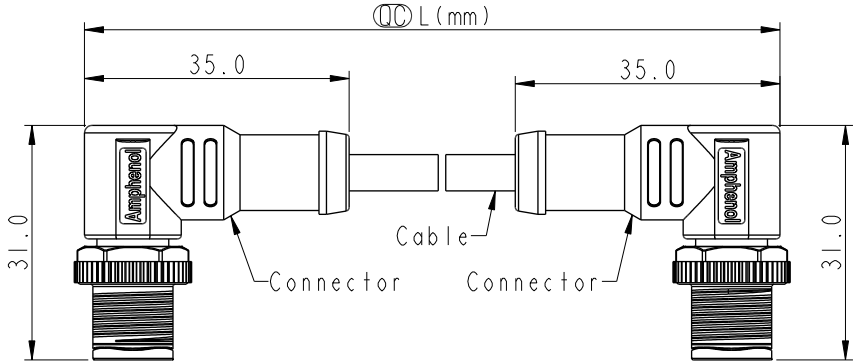

B M12DXXMR-12DMR-SBXXX

XX: No. Of Pin

XXX: 0.5~99Meters
A05: 0.5 Meter
001: 1 Meter
002: 2 Meters
:
099: 99 Meters

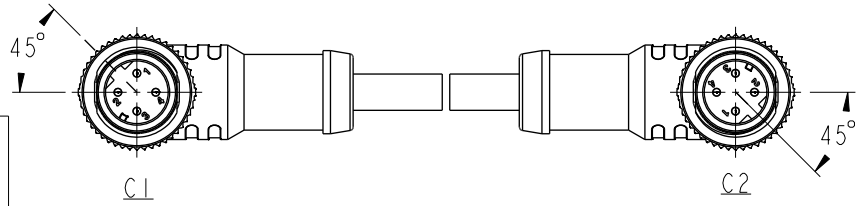

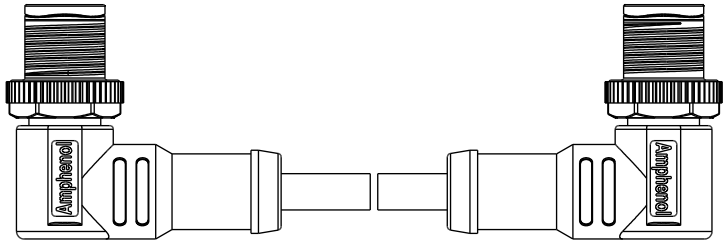

Note: B C D
* RoHS Compliant
* QC Important dimension
* Waterproof rate: IPX8, mated 1m/24h
  IPX9K, mated
* Connector:
  Housing: Thermoplastic, Black
  Pin: Copper alloy, Gold plated
  Nut: Metal
  Outer mold: Thermoplastic, Black
* Cable: UL20549, 22#*4C, OD=4.0mm, PUR Jacket, Black
* Cable length tolerance: 0.5M < L ≦ 1M: +60/-0 mm
  1M < L ≦ 3M: +120/-0 mm
  3M < L ≦ 5M: +160/-0 mm
  5M < L ≦ 10M: ±100 mm
  10M < L ≦ 20M: ±200 mm
  20M < L ≦ 30M: ±300 mm
  30M < L ≦ 99M: ±500 mm

Pin Out			
	5	--	
	4	Black	黑
	3	Blue	藍
	2	White	白
	1	Brown	棕
	Pin #	Wire	

C1 & C2

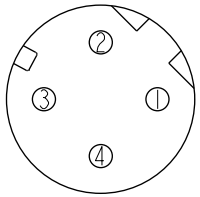

4P

Pin Assignments Front View

UNIT:mm

TOLERANCE ±0.5 mm

TITLE	ACC, SEN, D Code, DB-ENDED MM D		
SCALE 1:1	SIZE A4	SHEET 1 OF 1	
REV. D	WC-REV. A.5	QC: Inspection item	

Amphenol LTW
安費諾亮泰企業股份有限公司

ITEM NO	DRAWN BY Vicky	DATE 2018-12-11
DWG NO B M12DXXMR-12DMR-SBXXX	CHECKED BY Rita	DATE 2018-12-11
CUSTOMER ALTW	APPROVED BY Max	DATE 2018-12-11

W10814-03-R01A2

THIS DOCUMENT IS SUBJECT TO CHANGE WITHOUT NOTICE. IT IS CONFIDENTIAL AND A PROPERTY OF Amphenol LTW. DISCLOSURE TO THIRD PARTY HAS TO BE AUTHORIZED BY Amphenol LTW.