REV.	ECN NO.	DATE	SIGN	DESCRIPTION
C	LEN-790207	2007/09/12	WUFEI	Change Nut
D	LEN-920137~40	2008/10/06	Li Xiu Zhi	Change Front View
E	LEN1710120~24	2017/01/17	Ruru	Change Logo

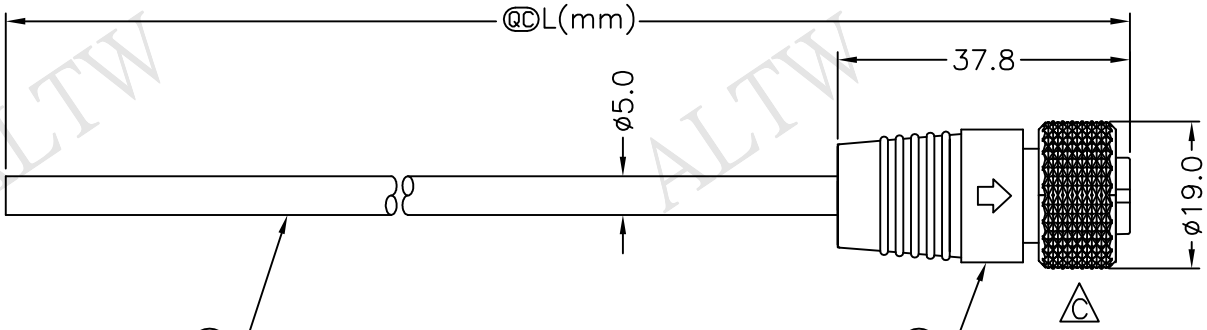

Cable (2)

BSD-05BFFM-SL6000 (1)
Color: Black

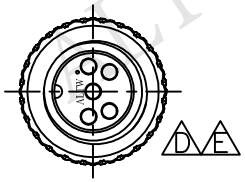

Conn.

ALTW DCC. DEPT. CONFIDENTIAL 2017.01.23 ISSUED

ALTW CONFIDENTIAL 2017.01.17 R&D DEPT.

BSD-05BFFM-SL6AXX

XX:01~99Meter
01:01Meter
02:02Meters
:
:
99:99Meters
Cable Length(L):01~99Meters

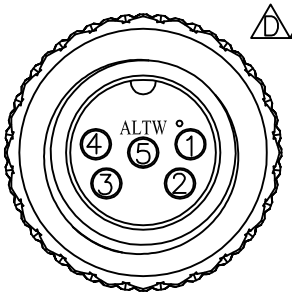

Pin Assignments
Front View

Conn.	Wire Color	Pin Out
Shield	Drain 地線	B
5	Green 綠	
4	White 白	
3	Black 黑	
2	Blue 藍	
1	Brown 棕	

Note:
* QC Important Dimension.
* Waterproof Rate: IP66
* Connector: Black, Nylon+GF
* Female Pin: Copper Alloy, Gold Plated
* Cable: Black,UL2464 24AWG*5C+Drain+Al/My PVC Jacket UV Resistant, OD=5.0mm
* D Cable Length Tolerance:01M:40mm
  02M~05M:60mm
  06M~10M:100mm
  11M~30M:200mm
  31M~99M:500mm

UNIT:mm	TITLE: Standard Cable Screw 5Pin F Conn F Pin	Amphenol LTW 安費諾亮泰企業股份有限公司	ITEM NO	DRAWN BY: Ruru	DATE: 2017/01/17
TOLERANCE: ±0.5 mm	SCALE: Free / SHEET: 1 OF 1		DWG NO: BSD-05BFFM-SL6AXX	CHECKED BY: Rita	DATE: 2017/01/17
	REV.: E / SIZE: A4 / QC :Inspection Item		CUSTOMER: ALTW	APPROVED BY: Max	DATE: 2017/01/17

THIS DOCUMENT IS SUBJECT TO CHANGE WITHOUT NOTICE. IT IS CONFIDENTIAL AND A PROPERTY OF Amphenol LTW. DISCLOSURE TO THIRD PARTY HAS TO BE AUTHORIZED BY Amphenol LTW.