REV.	ECN NO.	DATE	SIGN	DESCRIPTION
B	LEN1190168	2011/08/26	Tony	Modify Dimension & Note

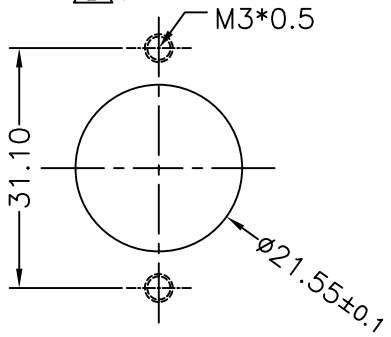

Recommended Panel Cut-Out

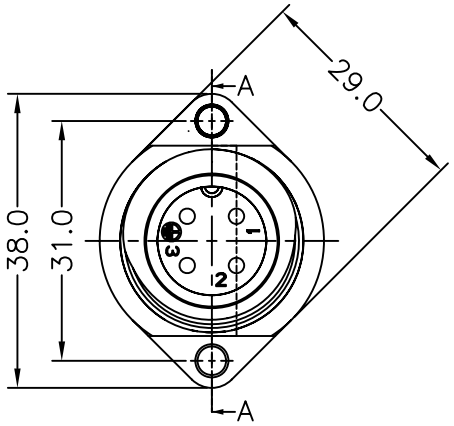

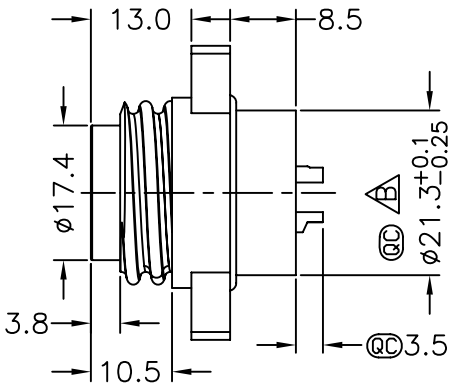

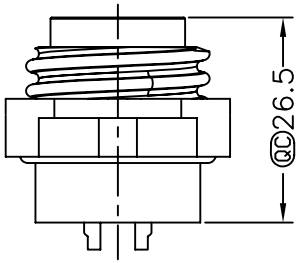

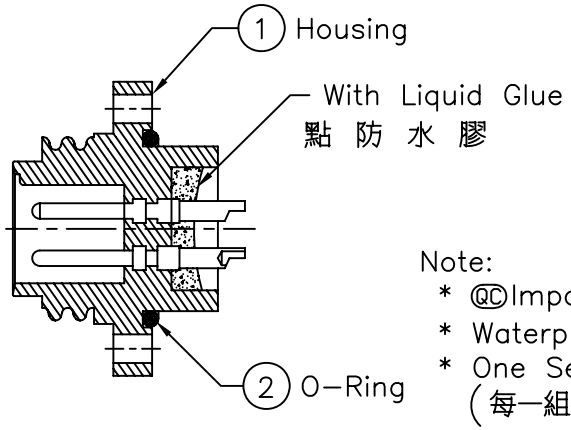

Section A-A

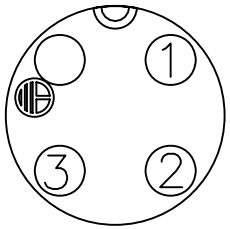

Pin Assignments
Front View前視圖

Note:
* QC Important Dimension.
* Waterproof Rate : IP67
* One Set in One LTW Sealed Bag (每一組裝, 放置於一個 LTW封口袋)
* Housing:Nylon+GF,Black.
* Male pin:Copper Alloy,Gold Plated
B * O-Ring:Silicone 60,Gray.
* Liquid Glue:Clear.

ALTW DCC. DEPT. CONFIDENTIAL 2011.09.19 ISSUED

ALTW CONFIDENTIAL 2011.08.30 R&D DEPT.

THIS DOCUMENT IS SUBJECT TO CHANGE WITHOUT NOTICE. IT IS CONFIDENTIAL AND A PROPERTY OF Amphenol LTW. DISCLOSURE TO THIRD PARTY HAS TO BE AUTHORIZED BY Amphenol LTW.

UNIT:mm	TITLE: 3+PE POWER CONNECTOR(12A)	Amphenol LTW 安費諾亮泰企業股份有限公司	ITEM NO: LTWPWF-04PMMS-SC7001	DRAWN BY: Tony	DATE: 2011/08/26
TOLERANCE: .X ±0.25, .XX ±0.1, .XXX ±0.05, ANGLES ±1°	SCALE: Free / SHEET: 1 OF 1		DWG NO: LTWPWF-04PMMS-SC7001	CHECKED BY: Chang	DATE: 2011/08/30
	REV.: B / SIZE: A4 / QC :Inspection Item		CUSTOMER: ALTW	APPROVED BY: LUKE	DATE: 2011/08/30

FMWI0702-01-01A2